Protocol

Energy Balance Assessment in a Whole-Room Indirect Calorimeter: Protocol for a Prospective Validation Study

Sarah Victoria Frenzel[1], MSc; Kong Y Chen[2], PhD; Paolo Piaggi[3,4], PhD; Natalia Schischkarjow[1,5]; Farah Alawa[5], BSc; Lena Sonnefeld[5], BSc; Lars Selig[5], PhD; Jonathan Krakoff[3], MD; Matthias Blüher[1,5], MD; Michael Stumvoll[1,5], MD; Sascha Heinitz[1,5], MD

[1]Helmholtz Institute for Metabolic, Obesity and Vascular Research, Helmholtz Zentrum München, Leipzig, Saxony, Germany
[2]Diabetes, Endocrinology and Obesity Branch, National Institute of Diabetes and Digestive and Kidney Diseases, Bethesda, MD, United States
[3]Phoenix Epidemiology and Clinical Research Branch, National Institute of Diabetes and Digestive and Kidney Diseases, Phoenix, AZ, United States
[4]Department of Information Engineering, University of Pisa, Pisa, Tuscany, Italy
[5]Medical Department III Endocrinology, Nephrology, Rheumatology, Medical Faculty, Leipzig University, Leipzig, Saxony, Germany

Corresponding Author:

Sascha Heinitz, MD
Medical Department III Endocrinology, Nephrology, Rheumatology
Medical Faculty, Leipzig University
Liebigstraße 20
Leipzig, Saxony 04103
Germany
Phone: 49 03419713815
Email: sascha.heinitz@medizin.uni-leipzig.de

Abstract

Background: Long-term body weight is regulated by the balance between energy intake and energy expenditure (EE). Although weight stability requires energy balance, achieving and maintaining such balance in everyday life is challenging. Whole-room indirect calorimetry enables precise 24 hour assessment of total EE and its components. Achieving energy balance within a whole-room indirect calorimeter (WRIC) represents a substantial challenge and depends critically on stringent clinical standardization, as well as robust technical performance, to ensure accurate estimation of energy requirements.

Objective: This study aimed to achieve energy balance within a WRIC and characterize the technical performance of 2 newly installed WRIC systems.

Methods: Healthy individuals, aged 18 to 65 years with a BMI of 18.5 to less than 40 kg/m^2, are eligible to participate in the study. Resting EE will be measured over 30 minutes and combined with the Mifflin-St. Jeor equation to calculate a personalized weight-maintaining diet (WMTD). Participants consume the WMTD for 3 days in free-living conditions before each 24-hour WRIC stay. Before and during WRIC assessments, participants are instructed to maintain predefined physical activity levels (PAL; 24-hour EE/resting EE). During the first 3 WRIC stays, low physical activity is targeted (PAL≈1.4). For the first 2 stays, EE is measured under identical standardized conditions for biological validation, with dietary energy matched to the WMTD adjusted for reduced activity. For the third stay, dietary energy is matched to the participant's mean 24-hour EE from the 2 preceding stays, and energy balance is calculated. A total of 2 further WRIC stays are performed at higher physical activity (PAL≈1.7) using cycle ergometry. During the first higher-activity stay, dietary energy equals the WMTD adjusted for PAL≈1.7. During the second, dietary energy is matched to the previously measured 24-hour EE at PAL≈1.7, and energy balance is reassessed. Standardized meals are provided inside the WRIC. After the final 24-hour assessments at PAL≈1.4 and PAL≈1.7, respectively, ad libitum energy intake is measured using a buffet to relate individual EE to subsequent energy intake. Body weight is monitored throughout the study.

Results: The trial commenced in August 2025. At the time of paper submission, 6 participants have been enrolled. Based on prior data, the analytical target sample size is 34 study completers. To account for an anticipated dropout rate, 49 participants will be enrolled. Recruitment began in August 2025. Recruitment is expected to be completed by December 2027, and final study completion is expected by June 2029. The final analyses will include energy balance, changes in body weight, components of EE, ad libitum energy intake, and circulating hormones involved in appetite regulation and satiety.

Conclusions: This trial evaluates whether energy balance can be achieved during repeated stays in a WRIC and provides a detailed assessment of the performance of 2 newly installed WRIC systems.

Trial Registration: ClinicalTrials.gov NCT07155564; https://clinicaltrials.gov/study/NCT07155564

International Registered Report Identifier (IRRID): DERR1-10.2196/92038

JMIR Res Protoc 2026;15:e92038; doi: 10.2196/92038

Keywords: energy balance; energy expenditure; energy intake; whole-room indirect calorimetry; validation study

Introduction

Body weight is determined by the balance between energy expenditure (EE) and energy intake [1]. When intake equals EE, individuals are in energy balance and body weight remains stable [1,2]. A sustained mismatch between EE and energy intake is a major driver of the rising prevalence of obesity [2]. Effective primary prevention of obesity therefore requires maintenance of long-term energy balance, yet reliably assessing an individual's balance in daily life is challenging [2-4].

Indirect calorimetry, measuring oxygen (O_2) consumption and carbon dioxide (CO_2) production to infer substrate oxidation, provides quantitative estimates of EE [5,6]. Whole-room indirect calorimetry (WRIC) is considered the gold standard for assessment of 24-hour EE because it allows accurate measurement of metabolized energy from carbohydrates, fats, and proteins. Energy expenditure is strongly and immediately influenced by multiple physiological and behavioral factors [6-8]—these must be identified and controlled to obtain valid estimates of an individual's energy requirements [9].

Unexplained variance in 24-hour EE represents a major source of uncertainty when estimating an individual's daily energy requirements and contributes substantially to observed interindividual differences in EE [10]. Day-to-day biological variability, physical activity, thermic effect of feeding, sleep durations and quality, circadian influences, together with measurement errors of the WRIC, all contribute to the variance of a single 24-hour EE measurement and reduce its reliability for detecting true physiological differences between individuals [9,10]. To precisely identify sources of variance in 24-hour EE and to attribute observed differences to specific biological or environmental effectors, measurements must therefore be made against a tightly controlled reference state [9].

A steady state, operationalized here as energy balance, is one such reference condition. If energy balance is not achieved or controlled for, transient adaptive changes in total EE can mask or mimic the effects of putative determinants of EE, leading to systematic over- or underestimation of their contribution [4,7,8]. Importantly, deviation from the state of energy balance induces predictable, yet individually variable shifts in substrate oxidation [11,12]. Under such nonsteady-state conditions, adaptive changes in fuel selection may be misattributed or remain undetected, thereby limiting the ability to characterize interindividual differences in metabolic responses, including the capacity to flexibly adjust substrate use in response to altered fuel availability [13]. Prior chamber studies have shown that repeated eucaloric assessments and individual adjustment of energy intake to measured 24-hour EE can improve the achievement of energy balance, whereas energy requirements derived from component-based estimates remain prone to imprecision [14,15]. However, systematic protocols that explicitly compare diet-specified energy prescriptions with WRIC-guided prescriptions across different levels of energy turnover remain limited. This gap is relevant because 24-hour EE measurements are susceptible not only to technical measurement error, but also to physiological and behavioral variability related to physical activity, sleep, body weight, and diurnal rhythms [9,16,17]. Consequently, the establishment and verification of near-steady-state conditions before and during indirect calorimetry are essential when the objective is to quantify subtle modulators of energy metabolism [7-9].

Beyond control of reference conditions, a range of methodological factors must be standardized and reported when conducting studies using WRICs, such as study design and performance [9], underscoring that valid inference about human EE depends not only on the physical environment in which measurements are taken but also on transparent reporting of robust and reproducible methodology [18-22].

Motivated by these considerations, we currently conduct a study with 2 linked aims: First, we seek to determine whether repeated WRIC measurements combined with individualized, prespecified dietary control can achieve a state approaching energy balance at low versus high energy turnover, thereby reducing a major confounder of 24-hour EE assessment and improving the ability to detect true interindividual differences. Second, the study functions as both a technical and biological validation of 2 newly constructed WRICs at the Helmholtz Institute for Metabolic, Obesity and Vascular Research of the Helmholtz Zentrum Munich at the University of Leipzig quantifying biological reproducibility across repeated participant stays. Together, these complementary objectives are intended to strengthen the interpretability of WRIC-derived estimates of human EE.

Methods

Study Design

The study covers 2 aspects: the validation of the 2 WRIC systems located at the study site, which is divided into technical and biological validation, and the examination of the achievability of energy balance within a WRIC and its effect on EE. Biological validation and examination of energy

balance are addressed methodically in the same clinical study design.

Technical Validation

Technical performance of each WRIC is assessed using methanol combustion, an established reference method that generates a near-constant rate of CO_2 production ($\dot{V}CO_2$) and O_2 consumption ($\dot{V}O_2$) that can be predicted stoichiometrically from the amount of fuel burned [9]. Methanol combustion provides the traceable, quantitative basis for reporting the accuracy and repeatability of WRIC systems according to the requirements of the Room Indirect Calorimetry Operating and Reporting Standards (RICORS 1.0) [9]. Furthermore, methanol was selected because current WRIC reporting recommendations do not designate a single gold standard technical validation method among available combustion- and gas-infusion–based approaches [9]. Methanol combustion represents the manufacturer-recommended and site-established standard operating procedure for the Maastricht Instruments-built WRIC systems used in this study.

Biological Validation and Energy Balance

This institutional review board-approved clinical study spans 18 days (Figure 1). Healthy volunteers meeting the inclusion and exclusion criteria (Textbox 1) are recruited. All participants receive written and oral information about study purpose, procedures, benefits, and risks and provide written informed consent prior to enrollment. To improve feasibility, the protocol is divided into 2 parts: an 11-day first part and a 7-day second part, with the second part scheduled within 3 months after completion of the first part. If relevant body weight changes occur between study parts, baseline assessments are repeated before continuation of the protocol. An anticipated dropout rate of approximately 30% has been considered in recruitment planning.

Figure 1. Study protocol. EB: energy balance within the whole-room indirect calorimeter (stay 1 to 5); PAL: physical activity level; WMTD: weight-maintaining diet; WRIC: whole-room indirect calorimeter.

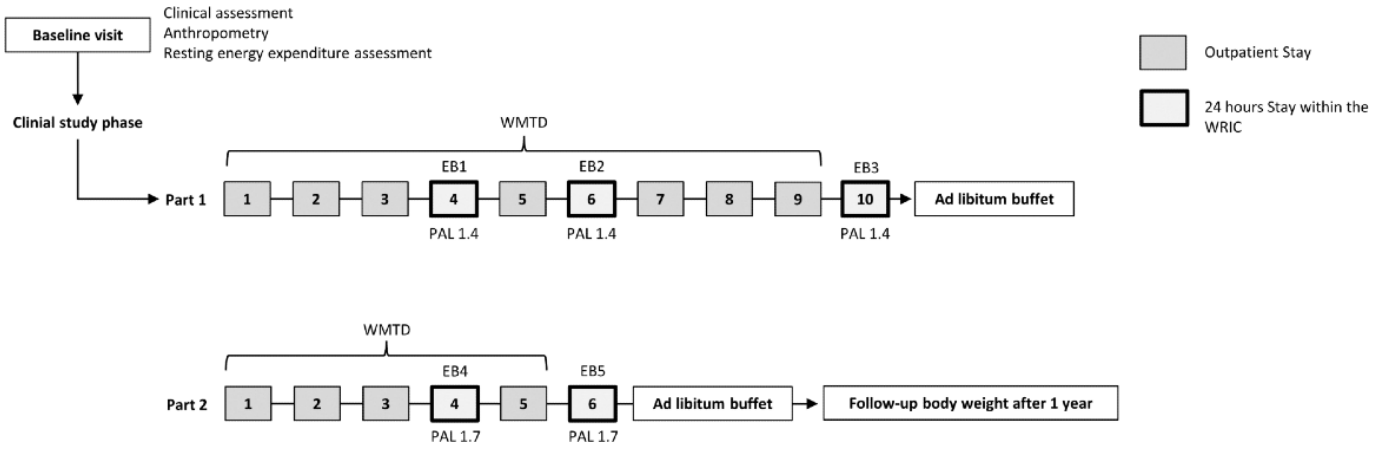

Textbox 1. Inclusion and exclusion criteria for study participation.

Inclusion Criteria

- Capacity to provide informed consent
- Written informed consent obtained
- Healthy volunteers (based on medical history and physical examination)
- Ability to perform standardized physical activity via cycle ergometry (50 W for women, 75 W for men, for 3×20 min, 3 times per day on 2 study days)
- Age 18-65 years
- Women: no hormonal contraception

Exclusion Criteria

- Inability to understand and comply with protocol requirements
- Weight change greater than 5 kg or greater than 5% of body weight within the past 3 months
- Active nicotine use
- Habitual physical activity exceeding 1 hour of sports per day
- Body mass index less than 18.5 kg/m^2 or ≥40 kg/m^2
- Chronic diseases affecting energy metabolism
- Food allergies or intolerances
- Vegan diet
- Contraindication to standardized physical activity
- Contraindications to wearing accelerometry devices (eg, silicone contact allergy)
- Diabetes mellitus, or prediabetes

- Alcohol or drug abuse
- Pregnancy or lactation
- Claustrophobia
- Declines disclosure of incidental findings

Three days before study entry, participants attend a baseline visit at the clinical study center. At that visit, we record anthropometric and demographic data and obtain a fasted blood sample. Participants are shown the WRIC and undergo a 30-minute measurement of resting EE. Participants who meet the eligibility criteria upon baseline assessment proceed to the clinical study phase and are, from this point on, instructed to limit structured exercise to less than 1 hour per day until study completion, except where, based on protocol, increased physical activity within the WRIC is allowed.

At entry of the clinical study phase, participants receive a wearable accelerometer, which they wear continuously for the duration of the rest of the study. Weight maintenance during the clinical study phase is assured via continuous administration of a weight-maintaining diet (WMTD). The WMTD is provided starting 3 days prior to the first stay within the WRIC. Caloric and caffeinated beverages are prohibited throughout the study. Water is allowed ad libitum. The WMTD and fluid intake instructions aim to stabilize metabolic state and maintain body weight [4]. Body weight is measured regularly throughout the study, and the WMTD is adjusted whenever body weight changes.

Each WRIC stay lasts approximately 24 hours, during which standardized main meals are provided at fixed times. During part 1 of the protocol (Figure 1), participants are required to maintain a low physical activity level (PAL; PAL≈1.4) and to refrain from structured exercise while inside the WRIC.

Biological repeatability is assessed by 2 initial, condition-matched WRIC measurements (study days 4 and 6; Figure 1), during which the caloric content of meals matched the precalculated WMTD adjusted for reduced physical activity within the WRIC [18]. Hereupon, participants return home with another 3-day WMTD run-in while maintaining low physical activity. During the third WRIC stay, the dietary caloric load is set to each participant's mean EE observed during the previous stays within the WRIC with the aim to achieve energy balance.

As EE has previously been reported to correlate with energy intake [2,3], in order to replicate these findings and evaluate to which extent this relationship is modified by attainment of energy balance, after the third 24-hour EE assessment, ad libitum energy intake is quantified using a buffet meal (study day 11).

In part 2 of the clinical study phase (Figure 1), following an additional 3-day WMTD run-in, participants complete 2 consecutive 24-hour WRIC stays during which they are asked to increase physical activity to a target PAL≈1.7 using supervised cycle ergometry, and energy balance is reassessed.

Because lower EE has been associated with increased body weight gain in some populations [23] and to investigate whether this relationship is confounded in these prior studies by failure to achieve energy balance, follow-up self-reported body weights are collected upon one year of completion of the study.

Primary Objectives

The primary objective of the study is to assess the achievement of energy balance under conditions of low and high energy turnover by comparing diet-specified energy intake (WMTD) with energy intake matched to measured 24-hour EE by WRIC. In support of this objective, the study additionally aims to evaluate the accuracy and reproducibility of the 2 newly established WRIC systems at the study site by repeated methanol combustion (technical validation) and 24-hour human EE measurements (biological validation).

Secondary Objectives

Secondary objectives of the study are to compare (1) accuracy of EE during sleep, awake-and-fed thermogenesis (AFT), and physical activity EE, (2) the influence of energy balance on the 24-hour EE components and on circulating hormones related to appetite and satiety, and (3) whether energy balance relates to ad libitum food intake and body weight development upon one year of study completion. Agreement between measured 24-hour EE and different approaches to estimating weight-maintaining energy requirements will be assessed as an exploratory outcome. These approaches include PAL-adjusted (1) measured resting energy expenditure (REE), (2) predicted REE derived from the Mifflin-St. Jeor equation, and (3) the mean of both REE estimates used for the WMTD. Agreement will be evaluated by comparing each estimate with WRIC-derived 24-hour EE.

An overview of the key elements of the study design is given in Multimedia Appendix 1.

Recruitment and Eligibility

Participants are recruited according to eligibility criteria (Textbox 1) via public advertising and the institute's website (helmholtz-munich.de/en/hi-mag). According to power calculation (see Statistical Analyses section), a total of 49 participants will be admitted to the study.

Summary of Methods

Methanol Combustion and Zero Tests

For each WRIC, we perform 6 methanol burns of 21 hour duration while continuously recording instrument $\dot{V}O_2$ and $\dot{V}CO_2$. Accuracy and precision are quantified by recovery rates, calculated as the ratio of measured to expected $\dot{V}O_2$,

$\dot{V}CO_2$, respiratory exchange ratio (RER; expected RER for methanol=0.667), and simulated EE (expressed as percent recovery and as absolute bias). Expected $\dot{V}O_2$ and $\dot{V}CO_2$ values for each burn are calculated from the mass of methanol (purity 99.9%, Merck) consumed as measured on a calibrated digital scale (XSR10001L, Toledo). Because the combustion-derived gas flows are traceable to the burned mass, methanol burns provide an external reference for the accuracy of measured $\dot{V}O_2$, $\dot{V}CO_2$, RER, and derived EE. The target recovery is 100%. Acceptable recovery is predefined as 98.5 ±2.5% for $\dot{V}O_2$, $\dot{V}CO_2$, and derived EE, whereas values below this threshold, marked over-recovery, or a monthly decrease in recovery by –2.5% will trigger technical review before human WRIC data are interpreted. Precision is assessed by the coefficient of variation (CV) across repeated burns. Based on published performance ranges for room indirect calorimeters, a CV of approximately 1%-5% for 24-hour EE and 5%-25% for macronutrient oxidation will be considered acceptable [9]. Because the combustion-derived gas flows are traceable to the burned mass, methanol burns provide an external reference for the accuracy of measured $\dot{V}O_2$, $\dot{V}CO_2$, and derived EE. The combustion test meets the standard for establishing calorimeter accuracy [9].

Methanol combustion allows comparison of measured O_2 consumption and CO_2 production with stoichiometrically derived reference values. Methanol combustion is an established validation method consistent with the RICORS 1.0, which recognizes different combustion-based and gas-infusion approaches without requiring a single reference fuel [9]. Recent investigations have demonstrated the accuracy and reproducibility of methanol-based validation in comparable Maastricht room calorimeters, including consistent performance across different combustion durations [24]. A detailed description of the methanol combustion apparatus and procedures has also been published previously [25].

In addition, 24-hour empty-room runs (ie, zero tests: no combustion and no participants) are conducted to characterize baseline drift and noise over the full measurement interval.

Initial Clinical Assessment and Anthropometry

Before the clinical study phase begins, a baseline visit is conducted during which blood pressure, heart rate, and body temperature are recorded in the fasted state. Anthropometric assessments are performed in the morning after an overnight fast under standardized conditions. Standing height and body weight are obtained using a calibrated stadiometer (seca 213, Seca GmbH) and digital scale (MPK 200K-1P, Kern & Sohn), with participants wearing light clothing and no footwear, in accordance with site-specific procedures.

Body composition, including total fat mass and fat-free mass, is determined using multifrequency bioelectrical impedance analysis (Biacorpus RX 4004M, Medi Cal Healthcare GmbH), using a standardized protocol [26]. After bladder voiding, for bioelectrical impedance analysis participants rest in a horizontal position for 10 minutes at a controlled ambient temperature prior to measurement. Electrodes are applied according to manufacturer instructions, and body composition variables are calculated using the devices' integrated prediction algorithms [27]. Although inferior to more robust estimates of fat mass and fat-free mass assessment, bioelectrical impedance analysis (BIA) was chosen because it is noninvasive, radiation-free, and appropriate for characterizing healthy study participants in the context of an energy-balance protocol.

In addition to baseline assessment, fasted body weight is measured at each subsequent study visit immediately before entering the WRIC and again upon completion of the 24-hour EE assessment. Participants provide a self-reported body weight 12 months after finishing the study.

Resting Energy Expenditure

Resting EE (REE) is determined using indirect calorimetry with a ventilated hood system (Omnical, Maastricht Instruments) during baseline assessment and within the WRIC. REE measurement takes place in the morning following an overnight fast. Participants rest in a supine position within a thermoneutral ambient temperature (22°C-24 °C). After a minimum acclimation period of 15 minutes, respiratory gas exchange is recorded continuously for approximately 25 minutes while participants remain awake, still, and relaxed. REE is derived from $\dot{V}O_2$ and $\dot{V}CO_2$ using the Weir equation [28]. All procedures comply with established methodological standards for indirect calorimetry [29], including avoidance of caffeine, nicotine, and strenuous activity beforehand, as well as calibration of the system prior to each assessment. The ventilated hood system has been validated for accuracy and reproducibility [30].

WMTD

A WMTD is calculated by integrating 2 approaches: resting EE measured via indirect calorimetry (Omnical) and the Mifflin-St. Jeor equation [31]. The individual WMTD is calculated as the mean of measured REE and predicted REE derived from the Mifflin-St. Jeor equation, multiplied by the prescribed PAL of approximately 1.4 or, during high-energy-turnover WRIC stays in part 2, approximately 1.7. This combined approach is used as a pragmatic, prespecified starting estimate rather than as a validated replacement for either method alone. Measured REE reflects the participant's current physiological state but may be influenced by short-term biological variability and measurement conditions, whereas the Mifflin-St. Jeor equation provides a stable anthropometry-based estimate but may not fully account for individual physiological variation. Averaging both estimates is intended to reduce the influence of method-specific error and to limit the risk of systematic over- or underestimation of individual energy needs. The performance of this WMTD approach will be evaluated by comparing diet-specified energy intake with measured 24-hour EE during WRIC stays. Exploratory analyses will additionally assess the agreement between measured 24-hour EE and alternative WMTD calculation strategies, including measured REE-based estimates, Mifflin-St. Jeor–based estimates, and the mean of both approaches. The prechamber dietary standardization

is consistent with RICORS recommendations that prestudy dietary and physical activity restrictions should be reported, including their duration and verification procedures [9]. Predefined dietary adjustments serve as an additional safeguard: Adjustments of ±200 kcal are made if body weight deviates by more than ±0.5 kg throughout the clinical study phase. The macronutrient composition of the WMTD is approximately 50% carbohydrates, 20% protein, and 30% fat [32], allowing for deviations of ±2% for each macronutrient to accommodate practical considerations in meal preparation.

Participants are instructed to consume the entire WMTD as provided, without leaving leftovers (required consumption of greater than 90% of provided food) or adding any additional foods. If meals are not fully consumed, remaining items must be returned to the research team to quantify unconsumed calories. In cases where participants add food items, they are asked to document all additions so that caloric intake can be determined post hoc.

For self-reported home body-weight, participants are instructed to measure body weight once one year after completion of the study in the morning, fasted, after voiding, and, if possible, after bowel movement, wearing underwear and no shoes. Participants are asked to use their own scale. If participants are able to attend the study site, they are invited to undergo body-weight measurement using the same calibrated scale used during study visits. Self-reported body weights will be reviewed for plausibility, and implausible or highly variable values will be queried and documented.

WRIC

Energy expenditure is measured continuously in the WRIC (dimensions: 3.3 m×3.7 m, 30,000 liters, Maastricht Instruments; Omnical gas analysis system: flow generation range 40 to 400 liters/min, pull system; Figure 2) [30]. During metabolic measurements, the WRIC flow rate is maintained at approximately 100-110 standard L/minute. This flow rate was selected according to manufacturer specifications and site-specific standard operating procedures to allow reliable detection of gas-exchange signals during sedentary activity while maintaining adequate ventilation and measurement range during increased physical activity induced by standardized bicycle ergometry. Data collection for 24-hour EE assessment begins 30 minutes upon entering the room (approximately 07:15 AM) and ends the following morning after a total recording of at least 23 hours. Within the WRIC, participants are instructed to maintain a low level of physical activity corresponding to a target PAL≈1.4 (see Physical Activity Outside the WRIC section below) for the standard 24-hour WRIC stay during part 1. Allowed behaviors include sitting or reclining for most of the day and light, nonexercise activities such as reading, watching television, using a laptop or tablet, surfing the internet, writing, and other desk-based tasks. Short, slow walks within the room (eg, to use the bathroom or briefly stretch) and light household-type movements are permitted. Participants must avoid any sustained or vigorous movements (eg, brisk walking, running, stair-climbing, heavy lifting, resistance exercise, or other sports). Exceptions apply for protocol visits with an elevated activity target (PAL≈1.7, part 2): During these stays, participants will perform supervised cycle ergometry according to the study protocol (see Physical Activity Within the WRIC section below) while all other activities remain as described above. Compliance will be ensured by continuous monitoring (WRIC measurements, activity sensors, and staff observation/logs) and by explicit instructions to the participant before and during the stay. Lights are turned off by 10:30 PM at the latest, and daytime napping is discouraged.

Mean rates of $\dot{V}O_2$ and $\dot{V}CO_2$ are derived from the continuous trace and extrapolated to a 24-hour interval to compute the 24-hour RER (24-hour RER) and total 24 hour EE (24 hour EE) using standard stoichiometric equations [6,28]: Energy expenditure and substrate oxidation will be calculated from oxygen consumption ($\dot{V}O_2$) and carbon dioxide production ($\dot{V}CO_2$) measured by WRIC. Twenty-four-hour EE will be calculated using the Weir equation [28]: EE =1440 (3.941 $\dot{V}O_2$ + 1.106 $\dot{V}CO_2$)–2.17 urinary nitrogen (UN), with $\dot{V}O_2$ and $\dot{V}CO_2$ expressed in L/minute and UN (24 hour) representing 24-hour urinary nitrogen excretion in g/day. Twenty-four-hour carbohydrate and fat oxidation will be calculated according to Frayn [33]: carbohydrate oxidation =4.55 $\dot{V}CO_2$_2-3.21 $\dot{V}O_2$ - 2.87 N, and fat oxidation =1.67 $\dot{V}O_2$ - 1.67 $\dot{V}CO_2$ - 1.92 N, and protein oxidation =6.25 UN, where $\dot{V}O_2$ and $\dot{V}CO_2$ are in L/day and UN in g/day. The ratio of $\dot{V}CO_2/\dot{V}O_2$ will be reported as RER, in accordance with current WRIC reporting recommendations [9].

Sleeping metabolic rate (SLEEP) is defined as the average metabolic rate during the time with lowest EE during the night over 3 consecutive hours [34]. Awake-and-fed thermogenesis, that is the increment in metabolic rate associated with the awake, fed but inactive state, is estimated as the difference between EE in the inactive, awake state (EE_0) and SLEEP (AFT =EE_0–SLEEP). EE_0 is obtained as the intercept of the minute-by-minute regression line relating EE to SPA calculated over the mid-day inactive window (11 AM to 1 PM) [23].

Substrate oxidation rates for lipids and carbohydrates over 24 hours are calculated from the 24-hour RER after correcting for protein oxidation as estimated from 24-hour urinary nitrogen excretion according to established procedures [35].

Figure 2. Whole-room indirect calorimeter at the study site. Panel A shows the control room located immediately outside the calorimeter. Study personnel operate and monitor the whole-room indirect calorimeter (WRIC) from this room via the calorimeter control software and ancillary monitoring equipment. Staff presence in the control room is kept to a minimum during measurement periods to avoid perturbing participants and chamber conditions. Panel B: Two-way communication with occupants is provided through an intercom (black rectangle next to the door, right) and observation windows, and small pass-throughs adjacent to the WRIC door (left) permit transfer of food and materials without disrupting the sealed environment. Panel C depicts the interior of the WRIC, which is configured for prolonged 24-hour stays. The WRIC contains basic sanitary facilities (sink and toilet), a convertible couch/bed for rest, a study desk and seating, a television and telephone, as well as a video game console for participant use. Privacy can be adjusted via internal window treatments. Lighting intensity is controllable, and natural daylight is available through a window. A cycle ergometer is installed when protocolized activity is required. The room supports participant comfort and safety while allowing continuous measurement of oxygen consumption and carbon-dioxide production under tightly controlled environmental and behavioral conditions.



Energy Intake Within the WRIC

During the first 2 WRIC stays, which serve as biological validation sessions, energy intake corresponds to approximately 80% of the WMTD administered during the 3 days preceding the first 24-hour EE assessment, accounting for reduced physical activity within the WRIC [9,18]. During the third WRIC stay, intended to achieve energy balance, energy intake is matched to the mean 24-hour EE measured during the initial 2 WRIC stays.

In part 2 of the study, designed to evaluate energy balance under elevated physical activity, a PAL≈1.7 is applied to estimate weight-maintaining caloric needs inside the WRIC. As for part 1, energy intake is, however, reduced to 80% of expected energy needs due to restricted physical activity [18]. For the repeated WRIC stay, energy intake is matched to the 24-hour EE measured during the preceding session.

Meals are served at 8 AM, 1 PM, and 6 PM Participants are instructed to finish each meal within 30 minutes, consume

all provided food, and avoid distractions such as electronic devices or media.

Physical Activity

Physical activity is standardized according to the requirements of each study phase. Although physical activity cannot be fully controlled under free-living conditions and within the WRIC, the protocol combines detailed activity instructions, repeated body weight assessments, and continuous accelerometry to document adherence to the prescribed activity regimens that allow evaluation of whether the prescribed diet and activity regimen approximate individual energy requirements over the clinical study phase.

Physical Activity Outside the WRIC

Physical activity outside the WRIC is restricted upon admission to the clinical study phase. To standardize habitual EE prior to each measurement period, participants are required to maintain a PAL≈1.4 over 3 consecutive days. A PAL≈1.4 reflects a low level of daily physical activity and represents the ratio of 24-hour EE to REE: Participants are instructed to maintain a predominantly sedentary to lightly active routine. Normal daily activities such as slow walking within the home, sitting, light household tasks, or brief shopping errands are permitted. Short walks of approximately 15-30 minutes per day at an easy pace are acceptable provided they do not induce noticeable sweating or exertion. More strenuous behaviors—such as structured exercise, heavy household work (eg, vacuuming and gardening), or prolonged stair climbing—are to be avoided. A substantial portion of the day should be spent sitting or lying down while engaging in low-intensity activities including reading, watching television, or working at a computer. Participants with physically demanding occupations are asked to discuss temporary modifications with the study team to ensure compliance.

This controlled low-activity regimen is implemented to maintain a consistent and low-to-moderate physical activity background, thereby minimizing variability in EE and ensuring reliable study outcomes.

Physical Activity Within the WRIC

Physical activity inside the WRIC is controlled analogously to activity outside the WRIC, aiming for a PAL≈1.4 during part 1 of the study. In part 2 of the clinical study phase, activity is increased to achieve a PAL≈1.7 by implementing standardized cycling bouts on a bicycle ergometer (Corival cardiopulmonary exercise testing [CPET], Lode; 50 W for females or 75 W for males; cadence 55 to 65 rpm). Participants complete 3 20-minute sessions, repeated 3 times per day, for a total of 3 hours of cycling per 24-hour period. This activity prescription follows a previously published WRIC protocol that achieved a PAL of approximately 1.7 using standardized cycle ergometry [20]. To monitor adherence and participant fatigue, cycling cadence is recorded minute by minute during each bout. In addition, participants are screened for health status before inclusion, WRIC stays are supervised by study staff, and participants can communicate with staff at any time via intercom. Deviations from the prescribed workload or cadence are documented and considered when evaluating adherence to the high-energy-turnover condition.

Accelerometry

Continuous accelerometry (MOX1, Maastricht Instruments) is used to assess adherence to prescribed physical activity both prior to each 24-hour EE measurement period and during WRIC stays. The device is worn on the upper leg and classifies posture and movement into sedentary, standing, and dynamic categories, with dynamic activity further stratified into low, moderate, and vigorous intensity (total time/day and percentage/day). The system also quantifies the number of sedentary bouts exceeding 120 minutes, the frequency of dynamic bouts, and the number of postural transitions from sitting to upright.

The accelerometer incorporates a triaxial sensor (sensitivity 4 mg/least significant bit [LSB], dynamic range ±8 g) and an integrated secure digital memory card for continuous data storage. Raw acceleration data are processed using the manufacturer-provided software (MOX1SW0, Maastricht Instruments) [36].

Noncompliance with activity instructions is related to possible changes in body weight, necessary adjustments of the WMTD, and indirect calorimetry outcomes and may result in exclusion of data from analyses. Sensitivity analyses assess the impact of individual nonadherence to activity instructions on primary and secondary outcomes. Decisions about exclusions based on borderline criteria are made blinded to the study outcome measures wherever feasible.

Ad Libitum Buffet

Ad libitum energy intake is evaluated through an individualized buffet paradigm, adapted from a previously published protocol [37]. Before admission to the clinical study phase, participants indicate preferred food items using a digital selection tool. The buffet is administered between 9 AM and 9:30 AM in a controlled environment free of distractions upon 24-hour EE assessment in energy balance, that is after the third and fifth stay within the WRIC. Participants are allowed 30 minutes of unrestricted access to their personalized buffet. All items are weighed immediately before and after consumption, enabling precise calculation of total kilocalories consumed. Despite individual tailoring of food choices, overall energy content and macronutrient distribution of the available food options are standardized across participants and study visits. Nutrient composition is derived from manufacturer-declared labels and established food composition databases [38].

Harms

The trial is considered low risk. Expected harms are mainly related to venous blood sampling, including transient pain, bruising, bleeding, hematoma, vasovagal reactions, and rarely local infection. Harms will not be assessed systematically, but participant-reported or staff-observed adverse events during study visits, blood sampling, or WRIC stays will be documented. Medically trained personnel are present at the study site

during study procedures and will assess and manage adverse events as needed.

Hormone Measurements

Fasting blood samples are obtained immediately before and after each 24-hour EE assessment within the WRIC to quantify circulating hormones related to appetitive regulation and satiety. Thyroid hormones are measured using electrochemiluminescence immunoassays (triiodothyronine: Elecsys free triiodothyronine [FT3 III]; thyroxine: Elecsys free thyroxine [FT4 IV]; Roche). Insulin-like growth factor-1 (IGF-1) is assessed using the Elecsys IGF-1 electrochemiluminescence immunoassay (Roche). Insulin concentrations are determined via chemiluminescence immunoassay (LIAISON; Diasorin). Leptin and adiponectin are quantified using enzyme-linked immunosorbent assay-based assays (ELISA; Mediagnost), and fibroblast growth factor 21 (FGF21) is measured with an enzyme-linked immunosorbent assay (ELISA) kit (Biovendor). Cortisol is quantified using an in-house assay based on liquid chromatography coupled to triple-quadrupole linear ion trap mass spectrometry as previously described [39,40].

Statistical Analyses

The primary endpoint, energy balance (diet-prescribed energy intake minus measured 24 hour EE, kcal/day, as well as percentage of measured 24 hour EE), is analyzed as the within-subject change before versus after adjustment of intake using a linear mixed model (LMM) with participant as a random intercept and time/condition as a fixed effect. The primary estimand is the mean within-participant change in energy balance between the diet-specified WMTD condition and the WRIC-guided energy-intake condition. The low- and high-activity conditions will be included in a single LMM, with condition, activity level, WRIC chamber/system, and the condition ×activity interaction included as fixed effects where supported by the data. The primary contrast will estimate the difference in energy balance between the WMTD and WRIC-guided conditions across activity levels. Activity-specific estimates for the low- and high-energy-turnover conditions will be reported as supportive analyses, and the condition ×activity interaction will be interpreted exploratorily. Prespecified covariates (eg, sex, age, and fat-free mass) are included as appropriate. The primary endpoint will be considered the main confirmatory analysis. Because the WRIC-guided condition necessarily follows the preceding WMTD assessment used for intake adjustment, period and order effects cannot be fully separated from condition effects and will therefore be acknowledged in the interpretation. The primary analysis will evaluate this deviation as a continuous outcome rather than as a dichotomous success criterion. For descriptive reporting, measurements with an absolute deviation of ≤100 kcal/day are classified as achieved near energy balance. This margin reflects prior eucaloric chamber data reporting an average 24-hour deviation of 25±71 kcal/day and is compatible with expected biological and technical variability of WRIC measurements [9,15]. The study uses a fixed, nonrandomized sequence of WRIC stays because the WRIC-guided energy-intake prescription depends on prior measurement of 24-hour EE during the diet-specified WMTD condition. Therefore, period, order, and acclimation effects cannot be fully separated from the effect of WRIC-guided intake adjustment. The primary estimand should thus be interpreted as the within-participant change in energy balance after sequential adjustment of energy intake to WRIC-measured 24-hour EE, rather than as a fully counterbalanced causal comparison between independent dietary conditions. Potential acclimation to the WRIC setting will be assessed descriptively by comparing repeated initial WRIC measurements obtained under the diet-specified WMTD condition. The primary analysis will compare the last WMTD-based WRIC measurement before dietary adjustment with the following WRIC measurement after intake has been adjusted to previously measured 24-hour EE. Secondary analyses of repeated EE components (24-hour EE, REE, etc) and acute hormonal responses (pre/post) use analogous LMMs. Hormone models will test time and condition (assumed energy balance vs energy balance as measured using WRIC) and their interaction. Associations between measured EE, ad libitum energy intake, and body weight change are assessed by Pearson or Spearman correlation (depending on distribution) and by linear regression adjusted for relevant confounders. Technical validation compares measured versus expected values from methanol combustion using paired tests (paired *t* test or Wilcoxon signed-rank test where appropriate), reports recovery (%) and absolute bias, and quantifies repeatability with intraclass correlation coefficients (ICC) and within-subject CV%. Within-chamber agreement will be evaluated by Pearson correlation and Bland-Altman plots. Exploratory analyses will compare the agreement of alternative WMTD calculation strategies with measured 24-hour EE. Specifically, PAL-adjusted energy requirements derived from measured REE, the Mifflin-St. Jeor equation, and the mean of both estimates will be compared with WRIC-derived 24-hour EE. Differences will be expressed in kcal/day and percentage of measured 24-hour EE. No formal multiplicity adjustment will be applied to supportive secondary or exploratory outcomes. These analyses will be interpreted cautiously and reported with effect estimates, 95% CIs, and exact *P* values.

Missing data will be described with respect to frequency, pattern, and reason, including withdrawal, incomplete study phases, technical failure, or nonevaluable WRIC measurements. Missing outcome data will not be imputed for the primary analysis. LMMs will include all available repeated measurements and allow analysis of unbalanced data under the assumption that data are missing at random. Where appropriate, sensitivity analyses restricted to complete cases or evaluable WRIC stays will be performed to assess the robustness of the primary findings.

Primary analyses will include evaluable WRIC measurements only. Measurements will be considered nonevaluable if predefined technical quality-control criteria are not met, including failed or out-of-range gas calibration, relevant analyzer drift or signal instability, airflow or pressure-control malfunction, relevant interruption of continuous data

acquisition, valid gas-exchange recording for less than 95% of the planned 24-hour measurement period, or methanol combustion recovery outside the predefined acceptable range. For methanol combustion, target recovery is 100%, with acceptable recovery predefined as ≥96% for $\dot{V}O_2$, $\dot{V}CO_2$, and derived EE; values below this threshold or marked over-recovery will trigger technical review according to site-specific WRIC standard operating procedures.

Objective adherence criteria will also be applied before analysis. Dietary adherence will be evaluated separately for the outpatient dietary run-in period and the WRIC stay. Minor documented deviations during the outpatient period, such as small deviations from the prescribed diet or limited additional intake, will not automatically render the subsequent WRIC measurement nonevaluable, but will be documented and considered in adherence and sensitivity analyses. During the WRIC stay, energy intake is fully standardized and documented. A deviation of ≤50 kcal/day from the prescribed in-chamber energy intake will be considered acceptable. For the high-activity condition, nonadherence will be defined as completion of less than 90% of the prescribed cycling duration, inability to maintain the prescribed workload, or cadence outside the target range of 55-65 rpm for more than 20% of cycling minutes. Cadence is recorded minute by minute during each cycling bout, allowing objective detection of participant fatigue or noncompliance. All exclusions and reasons for nonevaluable measurements will be documented before statistical analysis.

Technical measurement variability will be assessed by repeated methanol combustion experiments performed separately for each WRIC system. These experiments provide estimates of system accuracy, precision, and technical variability under controlled non-biological conditions. Intra-individual biological reproducibility will be assessed using repeated human WRIC measurements performed under standardized dietary and physical activity conditions. Within-subject variability will be described using within-subject SD, CV, and intraclass correlation coefficients, as appropriate. Variability exceeding the quantified technical imprecision of the WRIC systems will be interpreted as biological and protocol-related variability under standardized human measurement conditions.

Sensitivity analyses will be performed to assess the robustness of the primary outcome. These will include analyses excluding measurements with predefined technical quality-control deviations (analyzer drift or system instability, airflow or pressure-control malfunction, relevant interruption of continuous data acquisition, and incomplete 24-hour recordings), analyses restricted to WRIC stays achieving near energy balance, and analyses considering adherence to the prescribed physical activity regimen. Because measurements are performed in 2 WRIC systems, chamber/system effects will also be assessed.

Power Analysis

Sample size was calculated assuming a detectable mean difference in energy balance of 100 kcal, a SD of 200 kcal, a 2-sided α=.05, and statistical power ≥80%, resulting in an analytical target sample size of 34 study completers. To account for an anticipated dropout rate of approximately 30%, 49 participants will be enrolled. Assumptions were informed by a prior WRIC study and expected variability in repeated energy balance measurements [15]. All tests are 2-sided and results are reported as estimated effects with 95% CIs and exact *P* values. No formal correction for multiple testing will be applied to secondary or exploratory outcomes, which will be interpreted as supportive and hypothesis-generating. Findings from secondary analyses will therefore be interpreted cautiously in view of multiplicity and sample size. Analyses and figures are generated using GraphPad Prism 10 (v.10.4.1, GraphPad Software) and Statistical Analysis System (SAS; v9.4, SAS Institute).

Ethical Considerations

The study will be conducted in accordance with the Declaration of Helsinki and follows established Good Clinical Practice standards. Participation is voluntary and participants provide written informed consent to the principal investigator after a verbal and written explanation of the study aims, procedures, potential benefits, and risks. Adequate time is allowed for consideration prior to enrollment. Participants may withdraw at any time without giving a reason and without disadvantage. In the event of withdrawal, collected data are handled in accordance with applicable legal requirements (including deletion of personal data where required).

All study data are pseudonymized at collection using individual study identifiers and stored separately from identifying records, which are kept under secure conditions. Pseudonymized data are used for statistical analysis and publication. Sharing of data with third parties is restricted to scientific purposes and requires prior approval by an ethics committee. Only pseudonymized datasets that do not permit reidentification are released. Individual-level data will not be made publicly available in an open repository. Deidentified data may be shared by the corresponding author upon reasonable request and in accordance with ethical approval, institutional policies, and applicable data protection regulations.

Except for bruises and/or potentially minor infections at the site of blood draw, no specific adverse effects or contraindications are expected in the recruited, healthy study population. Incidental clinical findings are communicated to participants and appropriate follow-up diagnostics are recommended. Because participants must agree in advance to be informed of incidental findings, individuals who decline notification are not eligible for enrollment.

Participants occupy the WRIC for scheduled measurement sessions during the clinical study phase. While inside the WRIC, participants are free to leave the WRIC if they experience discomfort. Unscheduled departure results in termination of the measurement and withdrawal from further protocol assessments. The WRIC is furnished for prolonged comfort, provides daylight and visual contact with staff via

a window, allows acoustic contact through an intercom and telephone for external calls, offers adjustable privacy (blinds), and is equipped with an emergency call button. Medically trained personnel are available on site and contactable at all times.

The trial is registered on Clinicaltrials.gov (NCT07155564), where the record was first submitted on January 20, 2025, and first posted publicly on September 4, 2025. The first participant was enrolled on August 26, 2025. The trial was reviewed and approved by the ethics committee of the Medical Faculty of Leipzig University (institutional review board approval number 121/24-ek). Insurance coverage is provided for study-related incidents (including travel-accident insurance and a study liability policy covering damages up to US $560,980 [€500,000]). Participants receive financial compensation for study participation: €25 (US $27.50) for initial clinical assessment, €100 (US $110) per whole-room calorimetry visit, and an additional €50 (US $55) upon study completion.

The ClinicalTrials.gov record was harmonized with the current protocol version. The approved protocol amendment (version 1.1, September 3, 2026) includes revisions to the planned enrollment, eligible age range, technical validation procedures, and outcome hierarchy. Specifically, the current protocol specifies enrollment of 49 participants to achieve an analytical target sample size of 34 study completers, an eligible age range of 18-65 years, 6 methanol combustion tests per WRIC, and energy balance, defined as diet-prescribed energy intake minus WRIC-measured 24-hour EE, as the primary endpoint. Future amendments to the protocol will be subject to reexamination by the local ethics committee.

Results

Recruitment and funding began in August 2025 and, at the time of submission to the journal, 6 participants had been enrolled. Recruitment is ongoing and is expected to be completed by December 2027. Completion of the final study visit is expected by June 2029. Unprocessed output data of a 24-hour stay within the WRIC displaying EE (low and high energy turnover), RER, $\dot{V}O_2$, $\dot{V}CO_2$, as well as humidity and temperature within the WRIC are displayed in Figure 3. Results of the study are expected to be published in 2030.

Figure 3. Unprocessed output data of a 24-hour stay within the whole-room indirect calorimeter. EE and RER at low (A) and high (D) energy turnover, rate of oxygen consumption ($\dot{V}O_2$) and carbon dioxide production ($\dot{V}CO_2$; B), as well as humidity and temperature (C) are displayed. EE: energy expenditure; RER: respiratory exchange ratio.



Discussion

This protocol is primarily designed to test whether repeated WRIC measurements combined with individualized caloric prescription based on measured 24-hour energy expenditure from preceding chamber stays can establish a near-energy balance reference state under both low and high energy turnover conditions. We further hypothesize that this iterative, measurement-guided approach will reduce residual energy imbalance compared with a prespecified weight-maintenance diet alone, thereby improving the interpretability of WRIC-derived estimates of 24-hour energy expenditure and substrate oxidation. A complementary anticipated contribution is the technical and biological validation of two newly commissioned WRIC systems under a harmonized protocol [14].

Our approach to achieve a state of near-energy balance underlying the study protocol is grounded in prior chamber studies showing that individual adjustment of energy intake to measured 24-hour energy expenditure progressively improves achievement of energy balance and that repeated eucaloric chamber assessments remain part of contemporary state-of-the-art WRIC designs [14,15]. It is also consistent with evidence that energy requirements derived from component-based estimates are often imprecise, whereas WRIC-derived measurements substantially improve calibration of intake to expenditure [15]. In this context, this study extends prior work by explicitly comparing a diet-specified prescription with a WRIC-guided prescription across different levels of energy turnover while simultaneously evaluating system performance in two newly constructed calorimeters. Another point of comparison is the inherent susceptibility of 24-hour measurements to biological interference: Recent WRIC studies emphasize that free-living conditions complicate the interpretation of diet- and metabolism-related effects due to variability in activity, sleep, weight, and diurnal rhythms [41]. It has been shown that circadian fluctuations in resting energy expenditure can significantly distort the calculation of the thermic effect of meals if this baseline fluctuation is not taken into account [16]. Furthermore, it has been described that sleep restriction alters 24-hour EE under controlled WRIC conditions. A central methodological problem is thus not only device characteristics but also uncontrolled physiological and behavioral fluctuations which the study design presented here addresses [17]. This is precisely why a standardized approach to whole-room indirect calorimetry and the study described here, which investigates the question of energy balance, are so valuable for precise physiological phenotyping.

Notably, our study not only follows in the tradition of classic WRIC studies that investigate metabolic questions, but also reflects a current phase of harmonization, revalidation, and cross-site standardization: Previously, a consensus paper was developed precisely because results were difficult to compare across WRIC laboratories when technical performance, study design, and presentation of results were reported inconsistently [9]. Furthermore, it was described that WRICs demonstrate high reproducibility of common core variables in healthy adults, but were significantly more variable with regard to the measurement of macronutrient oxidation and spontaneous physical activity [18].

A major strength of the study is the integration of technical validation, biological reproducibility, and intervention-based energy-balance testing within a tightly standardized whole-room calorimetry environment. This approach is important because free-living assessments of human energy metabolism are difficult to interpret when variability in physical activity, sleep, circadian timing, dietary intake, and body weight is not adequately controlled [9,16,17,41]. By combining repeated WRIC measurements, individualized dietary control, standardized physical activity conditions, and validation of two newly constructed calorimeters, the study establishes a methodological framework for future investigations of subtle modulators of 24-hour energy expenditure and substrate oxidation. This aligns with current efforts to define methodological standardization and transparent reporting as prerequisites for reproducible human metabolism research [9,18,20,21].

Some limitations merit consideration. A limitation of the study design is that it is intentionally optimized for internal validity rather than broad clinical or ecological generalizability. The restriction to healthy adults without relevant metabolic disease reduces biological heterogeneity and avoids confounding by comorbidities or medications that may affect energy expenditure, substrate oxidation, appetite, or energy intake. This approach is appropriate for the initial validation of the WRIC systems and for testing controlled energy-balance conditions. However, it limits transferability to populations in whom obesity, diabetes, aging, and chronic energy imbalance are clinically most relevant. In addition, standardized dietary intake, prescribed physical activity, and WRIC confinement differ substantially from free-living conditions, where energy intake, activity patterns, sleep, circadian timing, stress, medication use, and comorbidities vary over time. Thus, findings from this protocol should not be interpreted as directly representative of habitual energy balance in daily life, but rather as evidence obtained under controlled reference conditions. Translation to free-living settings and broader clinical populations will require subsequent studies, potentially with adaptations to account for greater heterogeneity in energy requirements, medication use, physical limitations, metabolic disease, and tolerability of repeated WRIC stays. Measurement uncertainty also remains possible, particularly for derived outcomes such as substrate oxidation, spontaneous physical activity, and body-composition–adjusted analyses, which are inherently more variable than 24-hour energy expenditure and should therefore be interpreted with appropriate caution [41]. Body composition is assessed by BIA rather than dual x-ray absorptiometry (DXA). While DXA provides more robust estimates of fat mass and fat-free mass, BIA was selected because it is noninvasive, radiation-free, and suitable for healthy volunteers. Since body composition is not the primary endpoint, and because repeated DXA measurements would expose healthy participants to ionizing radiation without direct clinical benefit, BIA was considered appropriate for participant characterization and exploratory fat-free mass

(FFM)-adjusted analyses. Importantly, the use of BIA-derived FFM and FM in statistical models of energy expenditure may introduce measurement error and consequently affect the precision and potentially the validity of the estimated associations. Therefore, body composition-adjusted analyses will be considered exploratory and interpreted with appropriate caution. Future studies incorporating DXA would allow for a more precise assessment of body composition and its contribution to interindividual differences in energy expenditure.

The ad libitum buffet test, although standardized, may be influenced by behavioral factors such as compensation for prior dietary control, awareness of being observed, novelty of the laboratory setting, and individual food preferences. Therefore, ad libitum intake will be interpreted as a measure of acute eating behavior under controlled experimental conditions rather than as a direct proxy for habitual free-living energy intake. These considerations are particularly relevant for exploratory intake-related outcomes and do not directly affect the primary energy-balance analysis based on prescribed energy intake and WRIC-measured 24-hour EE. Finally, the study is conducted at a single site using 2 WRIC systems, so site-specific procedures may influence transferability to other centers.

No formal pilot study has been completed at the current study site, as this protocol is part of the establishment of a new metabolic phenotyping platform with two newly constructed WRIC systems. Accordingly, feasibility outcomes, including recruitment, completion of study phases, adherence to dietary and physical activity prescriptions, tolerability of WRIC stays, missing data, and reasons for withdrawal or exclusion, will be assessed to inform future studies using this platform.

If successful, the protocol may provide a practical framework for future WRIC studies that require a verified near–steady-state condition before examining subtle biological modulators of human energy metabolism. Future studies should determine whether this calibration strategy can be translated to populations with obesity or metabolic disease and whether harmonized multicenter WRIC protocols can improve comparability across laboratories. Integration of chamber phenotyping with molecular profiling may also help link controlled physiological responses to underlying metabolic pathways.

In line with SPIRIT-consistent dissemination practice [42], study findings will be communicated through peer-reviewed publications, scientific meetings, and reporting in trial registries where applicable. A lay summary of the main findings may be provided to participants on request, and sharing of de-identified data and analytic materials will be considered in accordance with participant consent, ethical approval, and institutional data-protection requirements.

In conclusion, this protocol combines a strict dietary and activity control with comprehensive technical validation to evaluate whether energy balance can be achieved and reliably measured in a whole-room indirect calorimeter. The study is expected to inform best practices for future whole-room indirect calorimeter studies and to provide quantitative estimates of instrument accuracy and biological repeatability. Finally, the findings of the study will contribute to harmonized standards for calorimetry protocols and reporting and subsequent work extending to larger and more diverse populations, as well as intervention studies.

Funding

This work was funded by the Helmholtz Institute for Metabolic, Obesity and Vascular Research Intramural Research Fund (BGAAF-2653) and by the Deutsche Forschungsgemeinschaft (DFG, German Research Foundation) under Germany's Excellence Strategy (EXC-3105/1, 533765739). The funders had no involvement in the study design, data collection, analysis, interpretation, or writing of the manuscript.

Authors' Contributions

Conceptualization: SH
Methodology: SH (lead), KYC, PP, JK, FA, L Selig
Investigation: SH, SVF, NS, L Sonnefeld, FA
Validation: NS
Project administration: SH (lead), SVF, NS, L Sonnefeld
Resources: SVF, L Selig, MB, MS
Supervision: SH (lead), KYC, MB, MS
Writing – original draft: SH
Writing – review & editing: SH, SVF, KYC, PP, JK, NS, L Sonnefeld, FA, L Selig, MB, MSSH will perform the planned primary data analyses, with statistical support from PP. SH serves as the guarantor of the work presented.

Conflicts of Interest

MS received honoraria as a consultant and speaker from Abbott, Amgen, AstraZeneca, Bayer, Boehringer Ingelheim, Daiichi–Sankyo, Lilly, MSD, Novo Nordisk, Novartis, Pfizer, and Sanofi; and reports chairing a Clinical Trial Data Safety Monitoring Board for Boehringer Ingelheim. All other authors have none to declare.

Multimedia Appendix 1

Elements of study design.
[DOCX File (Microsoft Word File), 16 KB-Multimedia Appendix 1]

References

1. Hall KD, Heymsfield SB, Kemnitz JW, Klein S, Schoeller DA, Speakman JR. Energy balance and its components: implications for body weight regulation. Am J Clin Nutr. Apr 2012;95(4):989-994. [doi: 10.3945/ajcn.112.036350] [Medline: 22434603]
2. Basolo A, Votruba SB, Heinitz S, Krakoff J, Piaggi P. Deviations in energy sensing predict long-term weight change in overweight Native Americans. Metabolism. May 2018;82:65-71. [doi: 10.1016/j.metabol.2017.12.013] [Medline: 29305947]
3. Weise CM, Hohenadel MG, Krakoff J, Votruba SB. Body composition and energy expenditure predict ad-libitum food and macronutrient intake in humans. Int J Obes. Feb 2014;38(2):243-251. [doi: 10.1038/ijo.2013.85]
4. Venti CA, Votruba SB, Franks PW, Krakoff J, Salbe AD. Reproducibility of ad libitum energy intake with the use of a computerized vending machine system. Am J Clin Nutr. Feb 2010;91(2):343-348. [doi: 10.3945/ajcn.2009.28315] [Medline: 19923376]
5. Lavoisier AL. Traité élémentaire de chimie. Maxtor France; 1789. ISBN: 9791020802026
6. Ravussin E, Lillioja S, Anderson TE, Christin L, Bogardus C. Determinants of 24-hour energy expenditure in man. methods and results using a respiratory chamber. J Clin Invest. Dec 1986;78(6):1568-1578. [doi: 10.1172/JCI112749] [Medline: 3782471]
7. Heinitz S, Hollstein T, Ando T, et al. Early adaptive thermogenesis is a determinant of weight loss after six weeks of caloric restriction in overweight subjects. Metabolism. Sep 2020;110:154303. [doi: 10.1016/j.metabol.2020.154303] [Medline: 32599082]
8. Reinhardt M, Thearle MS, Ibrahim M, et al. A human thrifty phenotype associated with less weight loss during caloric restriction. Diabetes. Aug 2015;64(8):2859-2867. [doi: 10.2337/db14-1881] [Medline: 25964395]
9. Chen KY, Smith S, Ravussin E, et al. Room Indirect Calorimetry Operating and Reporting Standards (RICORS 1.0): a guide to conducting and reporting human whole-room calorimeter studies. Obesity (Silver Spring). Sep 2020;28(9):1613-1625. [doi: 10.1002/oby.22928] [Medline: 32841524]
10. Weyer C, Snitker S, Rising R, Bogardus C, Ravussin E. Determinants of energy expenditure and fuel utilization in man: effects of body composition, age, sex, ethnicity and glucose tolerance in 916 subjects. Int J Obes. Jul 1999;23(7):715-722. [doi: 10.1038/sj.ijo.0800910]
11. Rynders CA, Bergouignan A, Kealey E, Bessesen DH. Ability to adjust nocturnal fat oxidation in response to overfeeding predicts 5-year weight gain in adults. Obesity (Silver Spring). May 2017;25(5):873-880. [doi: 10.1002/oby.21807] [Medline: 28440048]
12. Ellis AC, Hyatt TC, Hunter GR, Gower BA. Respiratory quotient predicts fat mass gain in premenopausal women. Obesity (Silver Spring). Dec 2010;18(12):2255-2259. [doi: 10.1038/oby.2010.96] [Medline: 20448540]
13. Rynders CA, Pereira RI, Bergouignan A, Kealey EH, Bessesen DH. Associations among dietary fat oxidation responses to overfeeding and weight gain in obesity-prone and resistant adults. Obesity (Silver Spring). Nov 2018;26(11):1758-1766. [doi: 10.1002/oby.22321] [Medline: 30358145]
14. Schrauwen P, van Marken Lichtenbelt W, Westerterp K. Energy balance in a respiration chamber: individual adjustment of energy intake to energy expenditure. Int J Obes. Sep 1997;21(9):769-774. [doi: 10.1038/sj.ijo.0800471]
15. Begaye B, Vinales KL, Hollstein T, et al. Impaired metabolic flexibility to high-fat overfeeding predicts future weight gain in healthy adults. Diabetes. Feb 2020;69(2):181-192. [doi: 10.2337/db19-0719] [Medline: 31712321]
16. Ruddick-Collins LC, Flanagan A, Johnston JD, Morgan PJ, Johnstone AM. Circadian rhythms in resting metabolic rate account for apparent daily rhythms in the thermic effect of food. J Clin Endocrinol Metab. Jan 18, 2022;107(2):e708-e715. [doi: 10.1210/clinem/dgab654] [Medline: 34473293]
17. Shechter A, Rising R, Albu JB, St-Onge MP. Experimental sleep curtailment causes wake-dependent increases in 24-h energy expenditure as measured by whole-room indirect calorimetry. Am J Clin Nutr. Dec 2013;98(6):1433-1439. [doi: 10.3945/ajcn.113.069427] [Medline: 24088722]
18. Stinson EJ, Rodzevik T, Krakoff J, Piaggi P, Chang DC. Energy expenditure measurements are reproducible in different whole-room indirect calorimeters in humans. Obesity. Sep 2022;30(9):1766-1777. [doi: 10.1002/oby.23476] [Medline: 35920141]
19. Baugh ME, Ahrens ML, Hutelin Z, et al. Validity and reliability of a new whole room indirect calorimeter to assess metabolic response to small calorie loads. PLOS ONE. 2024;19(6):e0304030. [doi: 10.1371/journal.pone.0304030] [Medline: 38900814]

20. Dörner R, Hägele FA, Koop J, et al. Validation of energy expenditure and macronutrient oxidation measured by two new whole-room indirect calorimeters. Obesity (Silver Spring). Sep 2022;30(9):1796-1805. [doi: 10.1002/oby.23527] [Medline: 35927795]
21. Henriksen HB, Henriksen C, Sousa ARS, et al. Validity and reproducibility of a whole-room indirect calorimeter for the estimation of VO2, VCO2, and resting metabolic rate. Physiol Rep. Apr 2023;11(7). [doi: 10.14814/phy2.15658] [Medline: 37020398]
22. Mähler A, Schütte T, Steiniger J, Boschmann M. The Berlin-Buch respiration chamber for energy expenditure measurements. Eur J Appl Physiol. Jun 2023;123(6):1359-1368. [doi: 10.1007/s00421-023-05164-w] [Medline: 36849666]
23. Piaggi P, Krakoff J, Bogardus C, Thearle MS. Lower "awake and fed thermogenesis" predicts future weight gain in subjects with abdominal adiposity. Diabetes. Dec 2013;62(12):4043-4051. [doi: 10.2337/db13-0785] [Medline: 23974925]
24. Bijnens W, Souren M, Ly C, Weerts M, Schoffelen P, Plasqui G. Characteristics and performance evaluation of the Maastricht room calorimeter systems. Med Eng Phys. Jun 1, 2026;147(6):065014. [doi: 10.1088/1873-4030/ae7602] [Medline: 42229483]
25. Zhou G, Bao K, Xiao H, Ge Y, Kong X, Liu T. Measurement of energy expenditure by indirect calorimetry with a whole-room calorimeter. Phenomics. Apr 2024;4(2):203-212. [doi: 10.1007/s43657-023-00127-9] [Medline: 38884055]
26. Kyle UG, Bosaeus I, De Lorenzo AD, et al. Bioelectrical impedance analysis--part I: review of principles and methods. Clin Nutr. Oct 2004;23(5):1226-1243. [doi: 10.1016/j.clnu.2004.06.004] [Medline: 15380917]
27. Sun SS, Chumlea WC, Heymsfield SB, et al. Development of bioelectrical impedance analysis prediction equations for body composition with the use of a multicomponent model for use in epidemiologic surveys. Am J Clin Nutr. Feb 2003;77(2):331-340. [doi: 10.1093/ajcn/77.2.331] [Medline: 12540391]
28. Weir JB. New methods for calculating metabolic rate with special reference to protein metabolism. J Physiol (Lond). Aug 1949;109(1-2):1-9. [doi: 10.1113/jphysiol.1949.sp004363]
29. Fullmer S, Benson-Davies S, Earthman CP, et al. Evidence analysis library review of best practices for performing indirect calorimetry in healthy and non-critically ill individuals. J Acad Nutr Diet. Sep 2015;115(9):1417-1446. [doi: 10.1016/j.jand.2015.04.003] [Medline: 26038298]
30. Schoffelen PFM, Plasqui G. Classical experiments in whole-body metabolism: open-circuit respirometry-diluted flow chamber, hood, or facemask systems. Eur J Appl Physiol. Jan 2018;118(1):33-49. [doi: 10.1007/s00421-017-3735-5] [Medline: 29080000]
31. Mifflin MD, St Jeor ST, Hill LA, Scott BJ, Daugherty SA, Koh YO. A new predictive equation for resting energy expenditure in healthy individuals. Am J Clin Nutr. Feb 1990;51(2):241-247. [doi: 10.1093/ajcn/51.2.241] [Medline: 2305711]
32. Deutsche Gesellschaft für Ernährung (DGE; German Nutrition Society). DGE-position: Richtwerte für die Energiezufuhr aus Kohlenhydraten und Fett. 2011. URL: https://www.dge.de/fileadmin/dok/wissenschaft/referenzwerte/energie/DGE-Positionspapier-Richtwerte-Energiezufuhr-KH-und-Fett.pdf [Accessed 2026-11-16]
33. Frayn KN. Calculation of substrate oxidation rates in vivo from gaseous exchange. J Appl Physiol. Aug 1, 1983;55(2):628-634. [doi: 10.1152/jappl.1983.55.2.628] [Medline: 6618956]
34. Schoffelen PFM, Westerterp KR. Intra-individual variability and adaptation of overnight- and sleeping metabolic rate. Physiol Behav. May 2008;94(2):158-163. [doi: 10.1016/j.physbeh.2007.12.013] [Medline: 18234245]
35. Abbott WG, Howard BV, Christin L, et al. Short-term energy balance: relationship with protein, carbohydrate, and fat balances. Am J Physiol Endocrinol Metab. Sep 1, 1988;255(3):E332-E337. [doi: 10.1152/ajpendo.1988.255.3.E332]
36. Bijnens W, Aarts J, Stevens A, Ummels D, Meijer K. Optimization and validation of an adjustable activity classification algorithm for assessment of physical behavior in elderly. Sensors (Basel). Dec 4, 2019;19(24):5344. [doi: 10.3390/s19245344] [Medline: 31817164]
37. Schlögl H, Kabisch S, Horstmann A, et al. Exenatide-induced reduction in energy intake is associated with increase in hypothalamic connectivity. Diabetes Care. Jul 2013;36(7):1933-1940. [doi: 10.2337/dc12-1925] [Medline: 23462665]
38. FoodData Central. US Department of Agriculture. URL: https://fdc.nal.usda.gov [Accessed 2026-10-28]
39. Ceglarek U, Kortz L, Leichtle A, Fiedler GM, Kratzsch J, Thiery J. Rapid quantification of steroid patterns in human serum by on-line solid phase extraction combined with liquid chromatography–triple quadrupole linear ion trap mass spectrometry. Clinica Chimica Acta. Mar 2009;401(1-2):114-118. [doi: 10.1016/j.cca.2008.11.022]
40. Bae YJ, Zeidler R, Baber R, et al. Reference intervals of nine steroid hormones over the life-span analyzed by LC-MS/MS: effect of age, gender, puberty, and oral contraceptives. J Steroid Biochem Mol Biol. Oct 2019;193:105409. [doi: 10.1016/j.jsbmb.2019.105409] [Medline: 31201927]

41. Perry AS, Piaggi P, Huang S, et al. Human metabolic chambers reveal a coordinated metabolic-physiologic response to nutrition. JCI Insight. Nov 22, 2024;9(22):e184279. [doi: 10.1172/jci.insight.184279] [Medline: 39576013]
42. Chan AW, Boutron I, Hopewell S, et al. SPIRIT 2025 statement. JAMA. Aug 5, 2025;334(5):435. [doi: 10.1001/jama.2025.4486]

Abbreviations

AFT: awake-and-fed thermogenesis
BIA: bioelectrical impedance analysis
CO_2: carbon dioxide
CPET: cardiopulmonary exercise testing
CV: coefficient of variation
DXA: dual x-ray absorptiometry
EE: energy expenditure
EE_0: energy expenditure in the inactive, awake state
ELISA: enzyme-linked immunosorbent assay
FFM: fat-free mass
FGF-21: fibroblast growth factor 21
ICC: intraclass correlation coefficients
IGF-1: insulin-like growth factor-1
LMM: linear mixed model
O_2: oxygen
PAL: physical activity level
REE: resting energy expenditure
RER: respiratory exchange ratio
RICORS: Room Indirect Calorimetry Operating and Reporting Standards
SAS: Statistical Analysis System
SLEEP: Sleeping metabolic rate
UN: urinary nitrogen
$\dot{V}CO_2$: rate of carbon dioxide production
$\dot{V}O_2$: rate of oxygen consumption
WMTD: weight-maintaining diet
WRIC: whole-room indirect calorimeter

Edited by Javad Sarvestan; peer-reviewed by Benedikt Merz, Russell Rising; submitted 04.Feb.2026; initial comments to author 21.Apr.2026; final revised version received 13.Oct.2026; accepted 20.Oct.2026; published 24.Nov.2026

Please cite as:
Frenzel SV, Chen KY, Piaggi P, Schischkarjow N, Alawa F, Sonnefeld L, Selig L, Krakoff J, Blüher M, Stumvoll M, Heinitz S
Energy Balance Assessment in a Whole-Room Indirect Calorimeter: Protocol for a Prospective Validation Study
JMIR Res Protoc 2026;15:e92038
URL: https://www.researchprotocols.org/2026/1/e92038
doi: 10.2196/92038

© Sarah Victoria Frenzel, Kong Y Chen, Paolo Piaggi, Natalia Schischkarjow, Farah Alawa, Lena Sonnefeld, Lars Selig, Jonathan Krakoff, Matthias Blüher, Michael Stumvoll, Sascha Heinitz. Originally published in JMIR Research Protocols (https://www.researchprotocols.org), 24.Nov.2026. This is an open-access article distributed under the terms of the Creative Commons Attribution License (https://creativecommons.org/licenses/by/4.0/), which permits unrestricted use, distribution, and reproduction in any medium, provided the original work, first published in JMIR Research Protocols, is properly cited. The complete bibliographic information, a link to the original publication on https://www.researchprotocols.org, as well as this copyright and license information must be included.